REVISION LIST							
ITEM	ECN NO.	POSITION	DESCRIPTION NEW	OLD	DATE	UPDATED BY	APPROVED BY

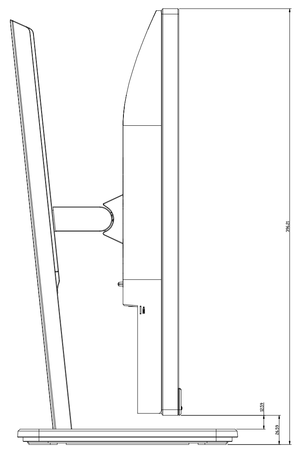

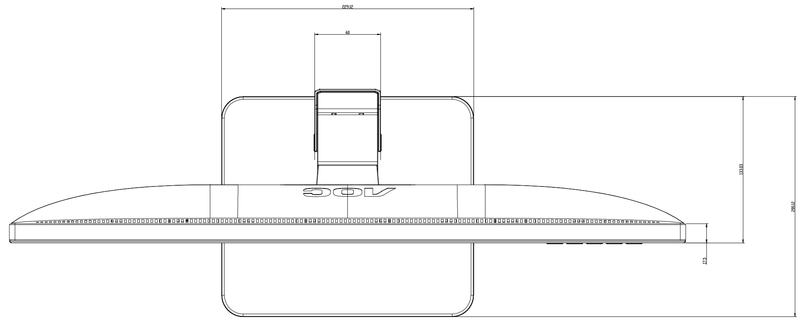

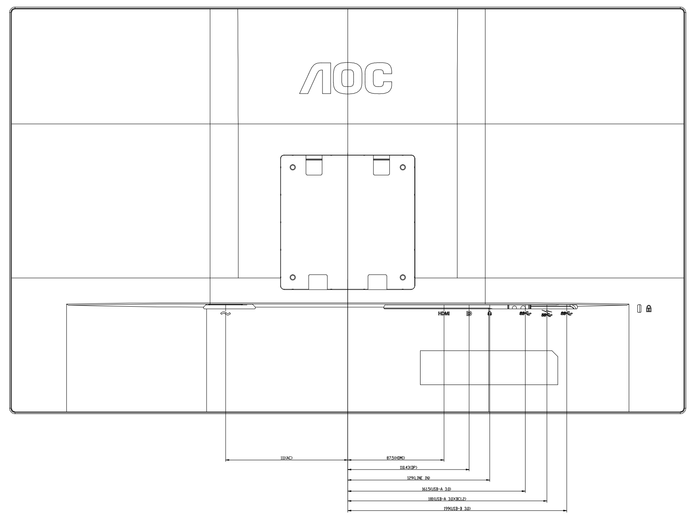

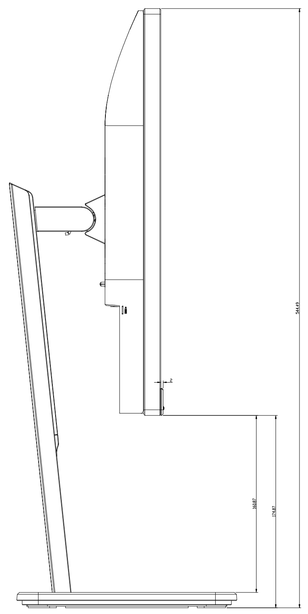

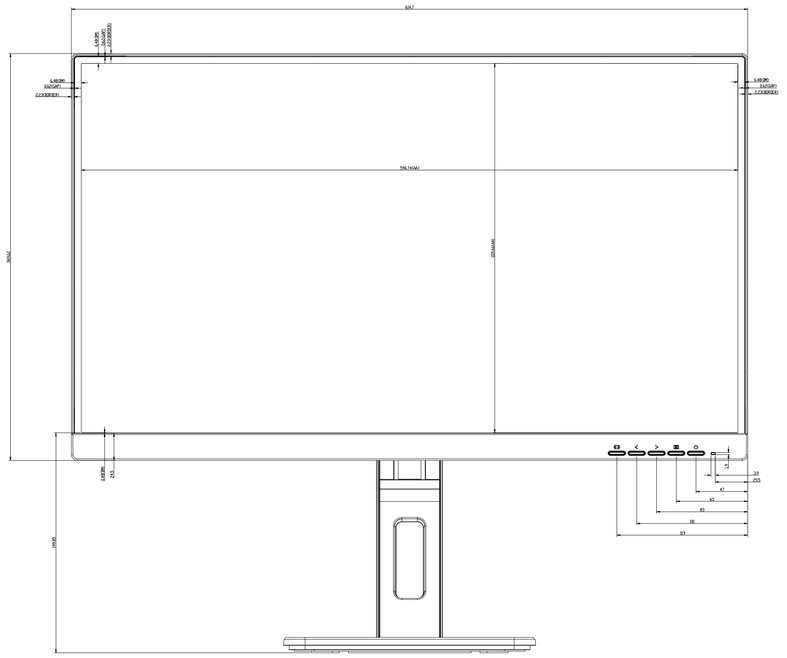

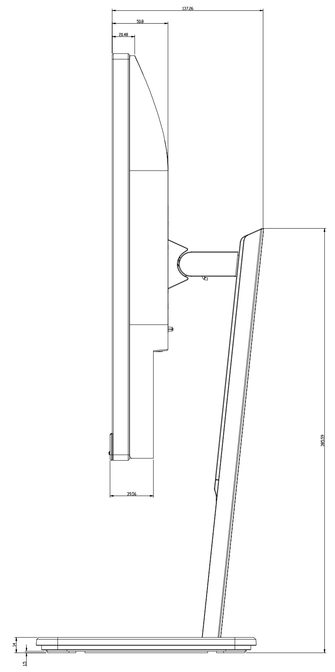

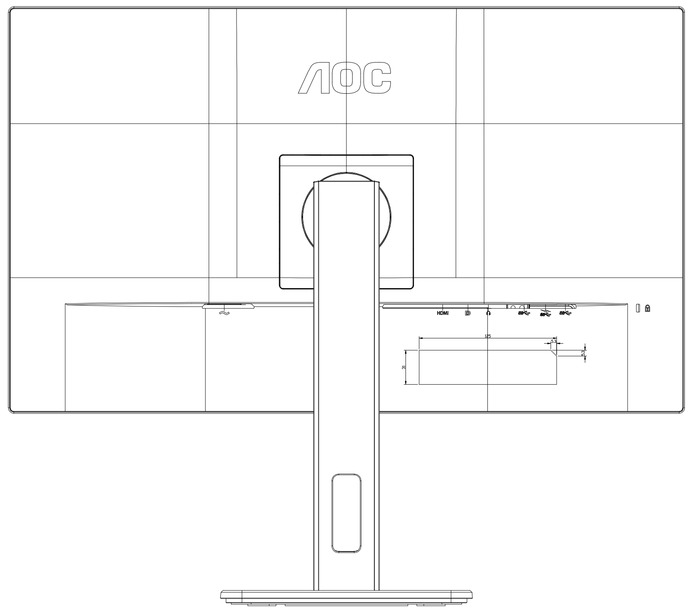

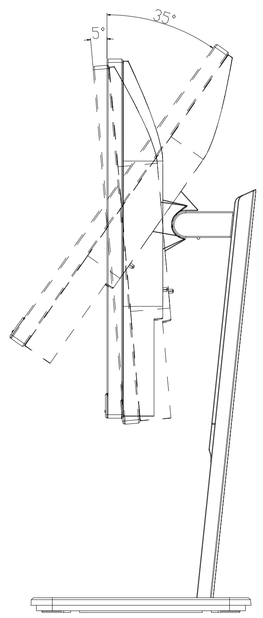

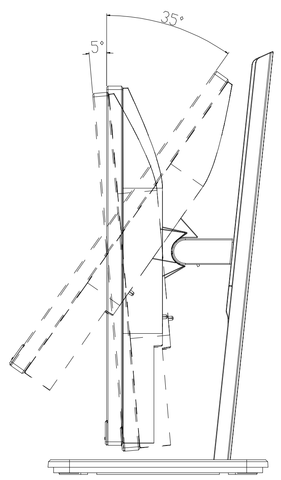

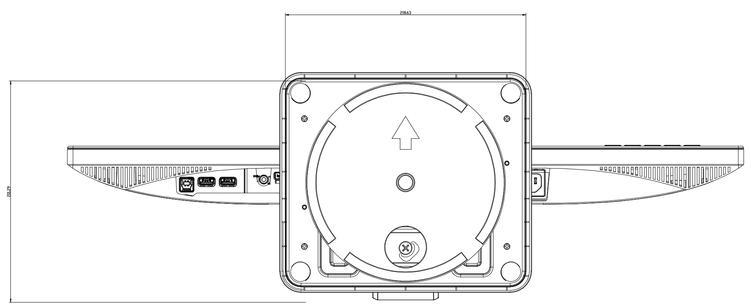

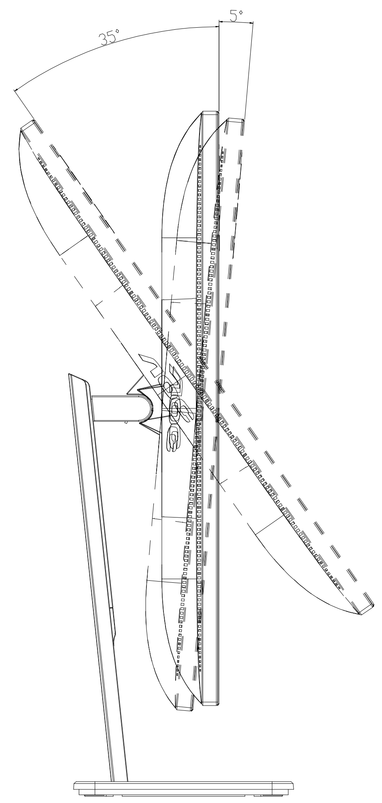

ELEMENTS UNITS TOLERANCE (PLUS/MINUS) (mm)				
RANGE (M)	(IN)	MIN. TOLERANCE	FRACTIONAL	LINEAR
0~30	0~1.2	0.1/0	±1/32	±0.8
30~60	1.2~2.5	0.2/0		
60~120	2.5~4.8	0.3/0		
120~260	4.8~10.2	0.4/0		
260~500	10.2~19	0.5/0		
500~1000	19~39	0.6/0	±1/16	±1.6
1000~2000	39~78	0.8/0		
2000~4000	78~157	1.0/0		
4000~6000	157~236	1.2/0		
6000~8000	236~315	1.5/0		
8000~10000	315~394	2.0/0		
MOLD (PLASTIC)		±0.05		
MOLD (SHEET METAL)		±0.10		
Internal Diameter of Plastic Screw Boss		±0.05		

ANGLE	±1°		
LENGTH	0~1000	±0.5~6	
	1000~2000	±0.8~12	
	2000~4000	±1.0~20	
	4000~6000	±1.2~30	
	6000~8000	±1.5~40	
	8000~10000	±2.0~50	

DRAWN		DATE	03/31/03
CHECK		DATE	

TPY TECHNOLOGY

TITLE: 27" LCD MONITOR

SIZE: A4 SCALE: 1:1 SHEET: 1 OF 1

REV:

DO NOT WRITE IN THIS AREA

RoHS